IHSM12R004H62

V_{DSS}	1200 V
$R_{DS(on)}$	4.3 mΩ

HAWKPACK 62 series

1200 V, 4.3 mΩ, Silicon Carbide, Half-bridge Module



62 mm

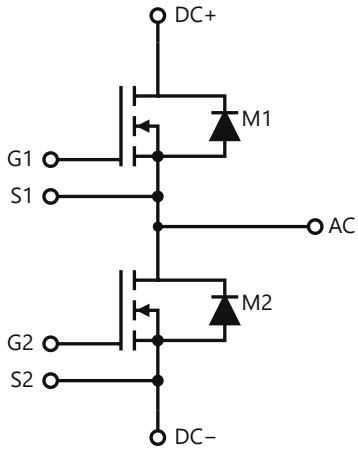

Circuit diagram

Features

- Industry-standard 62 mm outline
- Low $R_{DS(on)}$ SiC MOSFET half-bridge
- Copper baseplate

Typical applications

- Solid-state transformers (low-voltage DC stage)
- EV DC fast chargers
- UPS and industrial drives
- Energy-storage converters

Description

1200 V, 4.3 mΩ silicon-carbide MOSFET half-bridge module in a 106 × 61 mm industry-standard housing.

Key specifications

Parameter	Value
V_{DSS}	1200 V
$R_{DS(on)}$ typ., T_{vj} = 25 °C	4.3 mΩ
I_D nominal	360 A
Topology	Half-bridge
Outline	106 × 61 mm, copper baseplate

Full characterization data

Thermal resistance, switching energies and times, capacitances, gate charge and typical characteristic curves for IHSM12R004H62 are available on request: request the full data or write to sales@ironhawksemi.com.

Package

62 mm. Mechanical outline drawing, STEP model and PCB footprint available on request.

© 2026 IRONHAWK · Specifications are subject to change without notice

Ordering information

Part number	Packing	MOQ	Lead time
IHSM12R004H62	Box	On request	On request

Information in this document is believed to be accurate but is subject to change without notice. Typical values are not guaranteed. The customer is responsible for validating suitability in the end application. IRONHAWK · sales@ironhawksemi.com

© 2026 IRONHAWK · Specifications are subject to change without notice