IHSM12R006P2

V_{DSS}	1200 V
$R_{DS(on)}$	6 mΩ

HAWKPACK PF2 series

1200 V, 6 mΩ, Silicon Carbide, Half-bridge Module



Press-fit low-profile, large

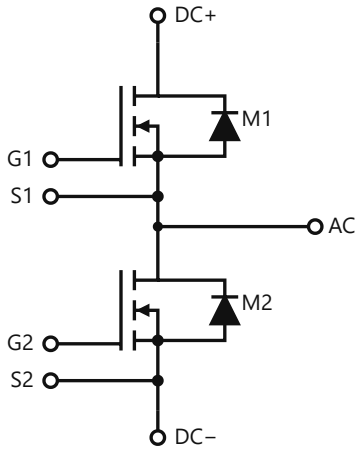

Circuit diagram

Features

- Baseplate-less, low-profile housing
- Press-fit control and power pins
- NTC temperature sensor (version dependent)

Typical applications

- EV DC fast chargers
- Battery energy-storage PCS
- Solar inverters
- Solid-state transformers (DAB stage)

Description

1200 V, 6 mΩ silicon-carbide MOSFET half-bridge module in an approx. 63 × 57 mm baseplate-less housing.

Key specifications

Parameter	Value
V_{DSS}	1200 V
$R_{DS(on)}$ typ., T_{vj} = 25 °C	6 mΩ
I_D nominal	200 A
Topology	Half-bridge
Outline	Approx. 63 × 57 mm, baseplate-less, press-fit pins

Full characterization data

Thermal resistance, switching energies and times, capacitances, gate charge and typical characteristic curves for IHSM12R006P2 are available on request: request the full data or write to sales@ironhawksemi.com.

Package

Press-fit low-profile, large. Mechanical outline drawing, STEP model and PCB footprint available on request.

© 2026 IRONHAWK · Specifications are subject to change without notice

Ordering information

Part number	Packing	MOQ	Lead time
IHSM12R006P2	Box	On request	On request

Information in this document is believed to be accurate but is subject to change without notice. Typical values are not guaranteed. The customer is responsible for validating suitability in the end application. IRONHAWK · sales@ironhawksemi.com

© 2026 IRONHAWK · Specifications are subject to change without notice