IHSM12R008P1

V_{DSS}	1200 V
$R_{DS(on)}$	8 mΩ

HAWKPACK PF1 series

1200 V, 8 mΩ, Silicon Carbide, Half-bridge Module



Press-fit low-profile

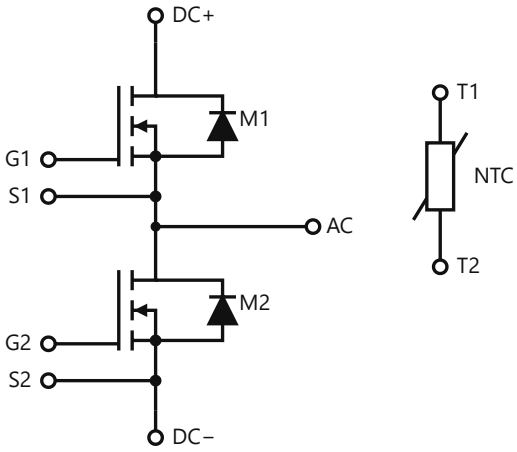

Circuit diagram

Features

- Baseplate-less, low-profile housing
- Press-fit control and power pins
- Compact half-bridge for 10–50 kW

Typical applications

- EV chargers and on-board power
- Solar and storage converters
- Auxiliary power supplies

Description

1200 V, 8 mΩ silicon-carbide MOSFET half-bridge module in a 62.8 × 33.8 mm baseplate-less housing.

Key specifications

Parameter	Value
V_{DSS}	1200 V
$R_{DS(on)}$ typ., T_{vj} = 25 °C	8 mΩ
I_D nominal	150 A
Topology	Half-bridge
Outline	62.8 × 33.8 mm, baseplate-less, press-fit pins

Full characterization data

Thermal resistance, switching energies and times, capacitances, gate charge and typical characteristic curves for IHSM12R008P1 are available on request: request the full data or write to sales@ironhawksemi.com.

Package

Press-fit low-profile. Mechanical outline drawing, STEP model and PCB footprint available on request.

© 2026 IRONHAWK · Specifications are subject to change without notice

Ordering information

Part number	Packing	MOQ	Lead time
IHSM12R008P1	Box	On request	On request

Information in this document is believed to be accurate but is subject to change without notice. Typical values are not guaranteed. The customer is responsible for validating suitability in the end application. IRONHAWK · sales@ironhawksemi.com

© 2026 IRONHAWK · Specifications are subject to change without notice