IHSM12R015H34

V_{DSS}	1200 V
$R_{DS(on)}$	15 mΩ

HAWKPACK 34 series

1200 V, 15 mΩ, Silicon Carbide, Half-bridge Module



34 mm

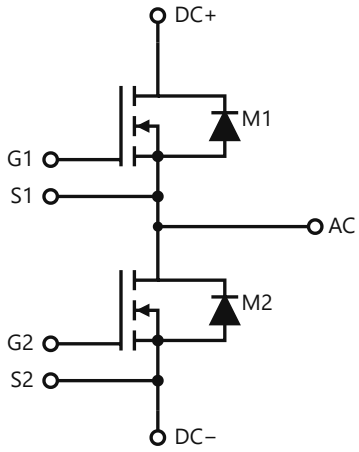

Circuit diagram

Features

- Compact 34 mm half-bridge outline
- SiC MOSFET half-bridge
- Copper baseplate

Typical applications

- EV DC fast chargers
- Industrial drives and welding
- Solar and storage converters

Description

1200 V, 15 mΩ silicon-carbide MOSFET half-bridge module in a compact 34 mm industry-standard housing.

Key specifications

Parameter	Value
V_{DSS}	1200 V
$R_{DS(on)}$ typ., T_{vj} = 25 °C	15 mΩ
I_D nominal	80 A
Topology	Half-bridge
Outline	Approx. 94 × 34 mm, copper baseplate

Full characterization data

Thermal resistance, switching energies and times, capacitances, gate charge and typical characteristic curves for IHSM12R015H34 are available on request: request the full data or write to sales@ironhawksemi.com.

Package

34 mm. Mechanical outline drawing, STEP model and PCB footprint available on request.

© 2026 IRONHAWK · Specifications are subject to change without notice

Ordering information

Part number	Packing	MOQ	Lead time
IHSM12R015H34	Box	On request	On request

Information in this document is believed to be accurate but is subject to change without notice. Typical values are not guaranteed. The customer is responsible for validating suitability in the end application. IRONHAWK · sales@ironhawksemi.com

© 2026 IRONHAWK · Specifications are subject to change without notice