# IHSM12R016P1

| | |
|---|---|
| $V_{DSS}$ | 1200 V |
| $R_{DS(on)}$ | 16 mΩ |

HAWKPACK PF1 series

1200 V, 16 mΩ, Silicon Carbide, Half-bridge Module

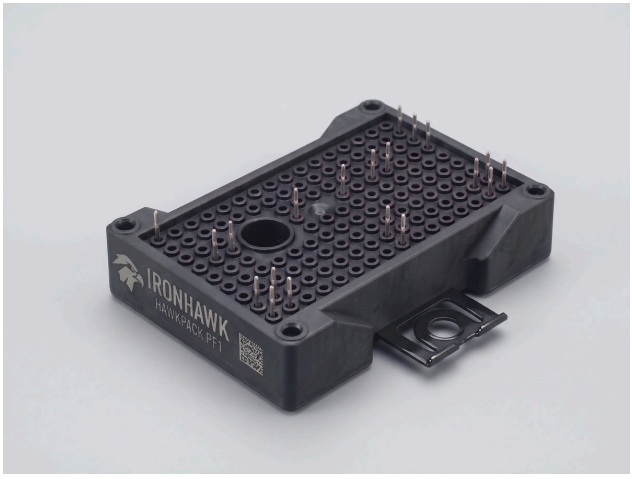


Press-fit low-profile

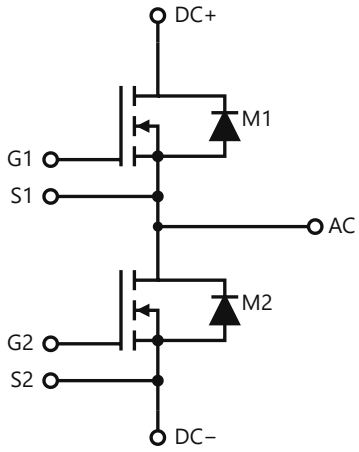


Circuit diagram

## Features

- Low $R_{DS(on)}$ SiC MOSFET half-bridge
- Baseplate-less, press-fit pins
- Industry-standard E-size footprint

## Typical applications

- EV fast chargers
- Solar and storage converters
- UPS and industrial drives

## Description

1200 V, 16 mΩ silicon-carbide MOSFET half-bridge module in a 62.8 × 33.8 mm baseplate-less housing.

## Key specifications

| Parameter | Value |
|---|---|
| $V_{DSS}$ | 1200 V |
| $R_{DS(on)}$ typ., $T_{vj}$ = 25 °C | 16 mΩ |
| $I_D$ nominal | 84 A |
| Topology | Half-bridge |
| $T_{vj}$ op. max | 175 °C |
| Outline | 62.8 × 33.8 mm, baseplate-less, press-fit pins |

## Full characterization data

Thermal resistance, switching energies and times, capacitances, gate charge and typical characteristic curves for IHSM12R016P1 are available on request: request the full data or write to sales@ironhawksemi.com.

© 2026 IRONHAWK · Specifications are subject to change without notice

## Package

Press-fit low-profile. Mechanical outline drawing, STEP model and PCB footprint available on request.

## Ordering information

| Part number | Packing | MOQ | Lead time |
|---|---|---|---|
| IHSM12R016P1 | Box | On request | On request |

Information in this document is believed to be accurate but is subject to change without notice. Typical values are not guaranteed. The customer is responsible for validating suitability in the end application. IRONHAWK · sales@ironhawksemi.com

© 2026 IRONHAWK · Specifications are subject to change without notice