IHSM23R005P2

V_{DSS}	2300 V
$R_{DS(on)}$	5 mΩ

HAWKPACK PF2 series

2300 V, 5 mΩ, Silicon Carbide, Half-bridge Module



Press-fit low-profile, large

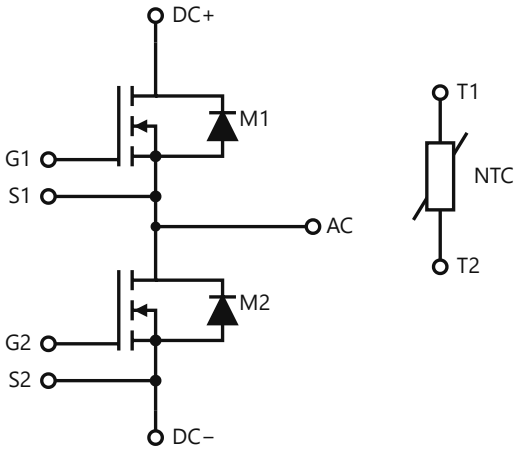

Circuit diagram

Features

- 2300 V SiC MOSFET half-bridge, 5 mΩ typical
- Two-level topologies on 1500 V DC buses
- Si3N4 active-metal-brazed (AMB) substrate
- Integrated NTC thermistor
- Low-inductance internal layout
- Kelvin source connection for each switch

Typical applications

- Solar inverters and battery energy storage (1500 V DC)
- DC fast chargers
- Motor drives
- Uninterruptible power supplies (UPS)

Description

2300 V, 5 mΩ SiC MOSFET half-bridge module with an integrated NTC thermistor in a compact 62.8 × 56.7 mm low-profile housing. Built for two-level converters on 1500 V DC buses: solar inverters, energy storage, fast chargers and drives.

Key specifications

Parameter	Value
V_{DSS}	2300 V
$R_{DS(on)}$ typ @ 25 °C, V_{GS} = 18 V	5 mΩ
I_D (terminal-limited)	150 A
I_{DM} pulsed	300 A
$T_{vj(op)}$	−40 … 150 °C
Isolation	4000 V_{RMS}, 50 Hz, 1 s

© 2026 IRONHAWK · Specifications are subject to change without notice

Full characterization data

Thermal resistance, switching energies and times, capacitances, gate charge and typical characteristic curves for IHSM23R005P2 are available on request: request the full data or write to sales@ironhawksemi.com.

Package

Press-fit low-profile, large. Mechanical outline drawing, STEP model and PCB footprint available on request.

Ordering information

Part number	Packing	MOQ	Lead time
IHSM23R005P2	On request	On request	On request

Compatibility

- Industry-standard 2300 V SiC half-bridge modules in the 62.8 × 56.7 mm low-profile footprint

All trademarks and part numbers belong to their respective owners. Cross-references indicate package/pinout compatibility only.

Information in this document is believed to be accurate but is subject to change without notice. Typical values are not guaranteed. The customer is responsible for validating suitability in the end application. IRONHAWK · sales@ironhawksemi.com

© 2026 IRONHAWK · Specifications are subject to change without notice