IHSM23R006P2

V_{DSS}	2300 V
$R_{DS(on)}$	6 mΩ

HAWKPACK PF2 series

2300 V, 6 mΩ, Silicon Carbide, Half-bridge Module



Press-fit low-profile, large

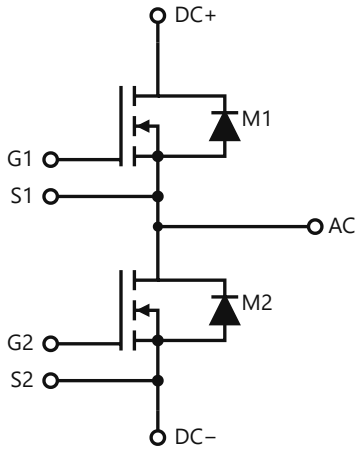

Circuit diagram

Features

- Low $R_{DS(on)}$ SiC MOSFET half-bridge
- Baseplate-less, press-fit pins
- Industry-standard E-size footprint

Typical applications

- Two-level converters on 1500 V DC buses
- 1500 V DC solar inverters and battery storage
- High-power DC-DC converters

Description

2300 V, 6 mΩ silicon-carbide MOSFET half-bridge module in a 62.8 × 56.7 mm baseplate-less housing.

Key specifications

Parameter	Value
V_{DSS}	2300 V
$R_{DS(on)}$ typ., T_{vj} = 25 °C	6 mΩ
I_D nominal	200 A
Topology	Half-bridge
T_{vj} op. max	150 °C
Outline	62.8 × 56.7 mm, baseplate-less, press-fit pins

Full characterization data

Thermal resistance, switching energies and times, capacitances, gate charge and typical characteristic curves for IHSM23R006P2 are available on request: request the full data or write to sales@ironhawksemi.com.

© 2026 IRONHAWK · Specifications are subject to change without notice

Package

Press-fit low-profile, large. Mechanical outline drawing, STEP model and PCB footprint available on request.

Ordering information

Part number	Packing	MOQ	Lead time
IHSM23R006P2	Box	On request	On request

Information in this document is believed to be accurate but is subject to change without notice. Typical values are not guaranteed. The customer is responsible for validating suitability in the end application. IRONHAWK · sales@ironhawksemi.com

© 2026 IRONHAWK · Specifications are subject to change without notice